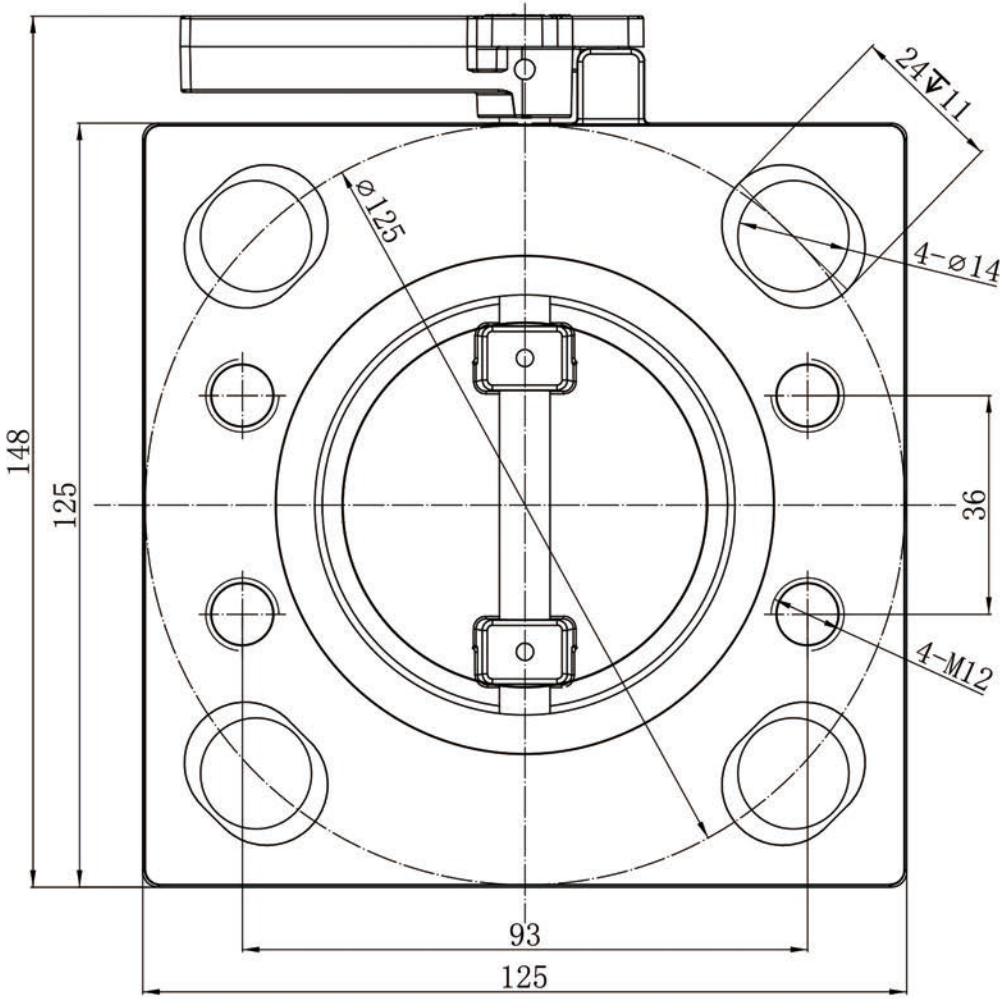

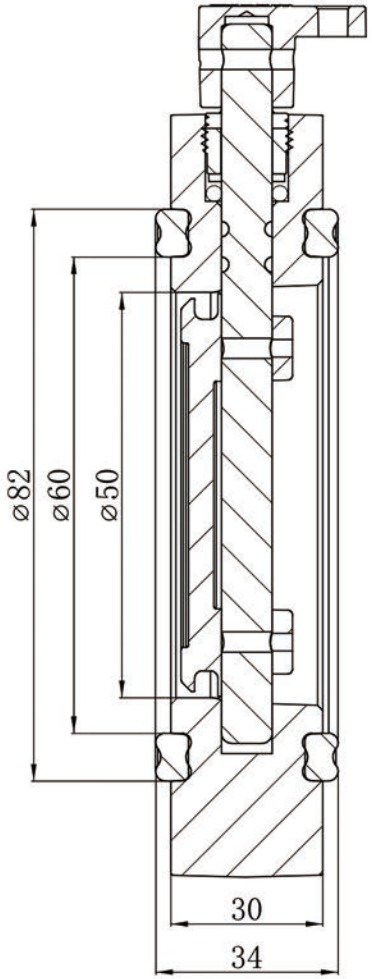

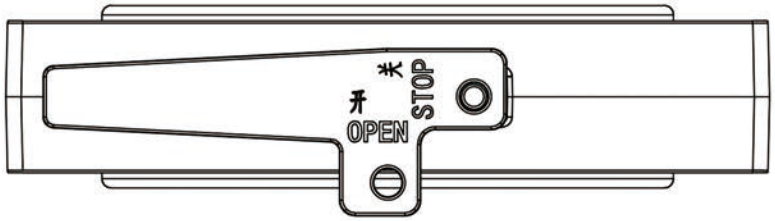

					DZ2L-50			OUCO Yueqing City Ouwei Electric Co.,Ltd
Mark	No	Document NO	Sign	Date	Mark		Weight	
Design		Huang	Standard					
Check			Approval		Page 1			OW-220950-1
Check		Jiang						
Process			Date	2022.09				